TECHNICAL DATA

SHEET 6AA-5

ARCADE 3 MOTORISED SHUTTERS
OVER CENTRE INSTALLATION - GENERAL ARRANGEMENT

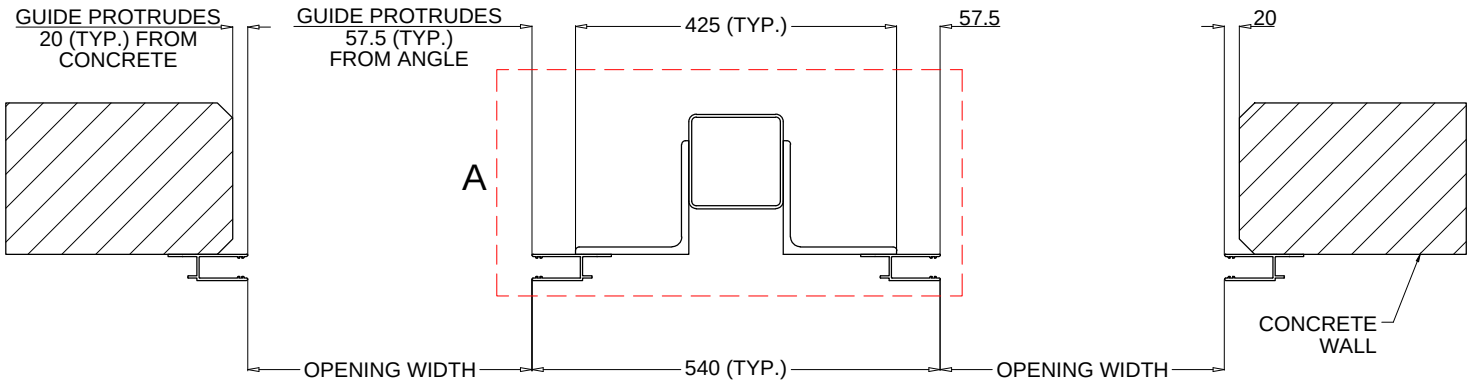

GENERAL ARRANGEMENT - PLAN

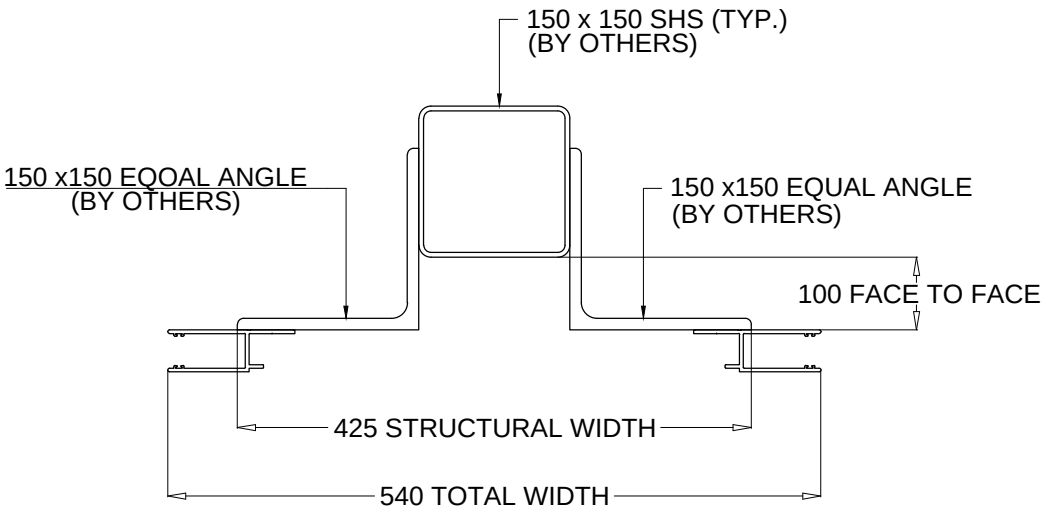

DETAIL A

ARCO(QLD) Pty. Ltd. ABN 27 108 275 896
334 Christensen Road South, Stapylton,QLD 4207 I Tel: 61 - 7 3807 5364 I Fax: 61 - 3382 7929
web: www.arcoqld.com.au