TECHNICAL DATA

SHEET 6AA-1

ARCADE 3 MOTORISED SHUTTERS
TYPICAL LAYOUT & COMPONENTS PROFILE

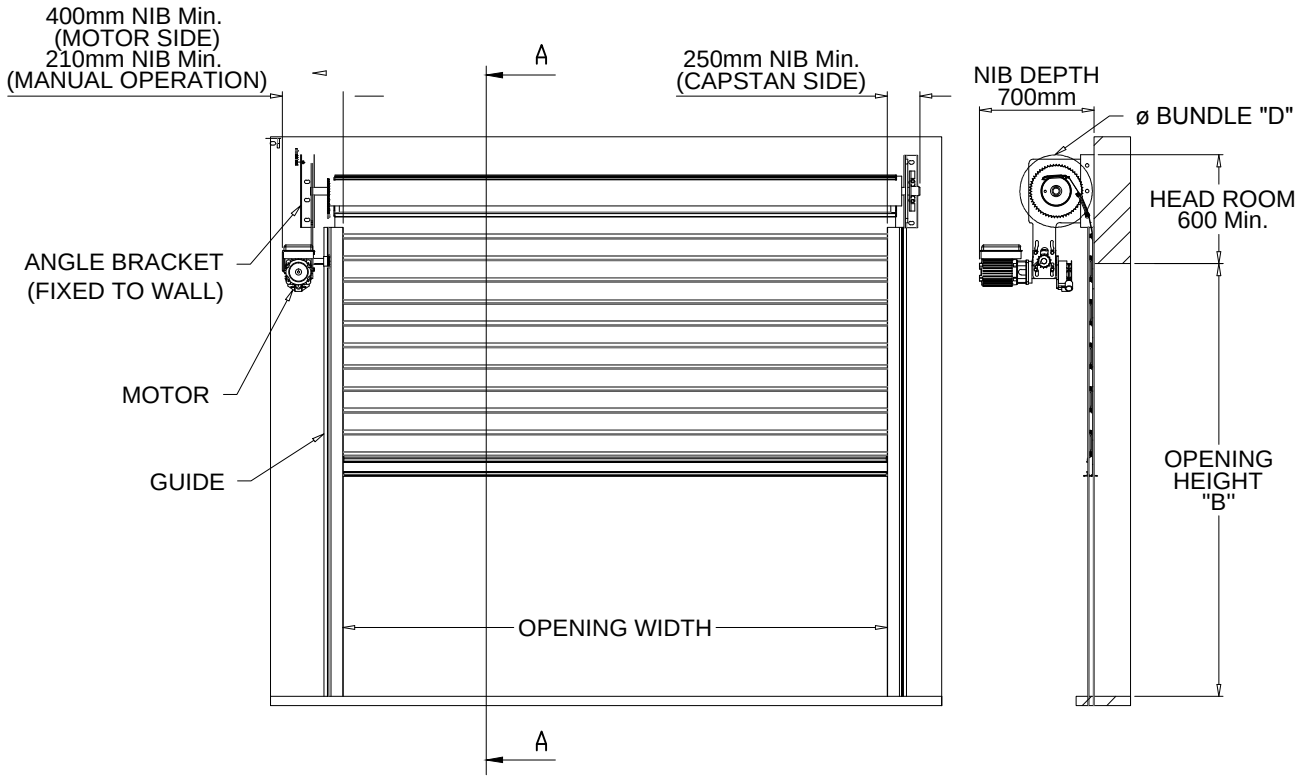

INSIDE ELEVATION

SECTION A-A

HEIGHT, "B"	1000	1500	2000	2500	3000	3500	4000	4500
BUNDLE, "D"	310	340	360	385	400	420	435	445

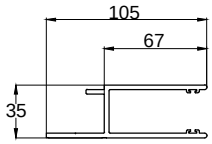

GUIDE
3.0mm ALUMINIUM

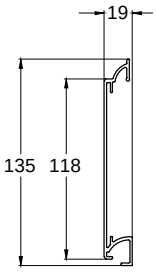

SLAT
1.6mm ALUMINIUM

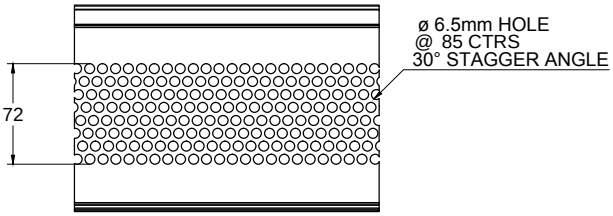

PERFORATION - MULTI HOLE

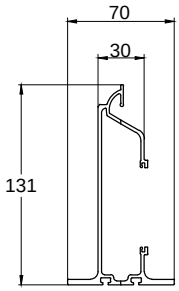

BOTTOM RAIL
2.2mm ALUMINIUM

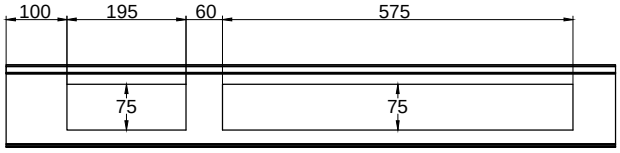

PERFORATION - SLOTTED PERFORATION - WIDE VIEW

ARCO(QLD) Pty. Ltd. ABN 27 108 275 896
334 Christensen Road South, Stapylton,QLD 4207 I Tel: 61 - 7 3807 5364 I Fax: 61 - 3382 7929
web: www.arcoqld.com.au